OPTI-Solar

Solar On-Grid Inverter
GT Series

English

Installation and Operation Manual

Only an electro-skilled person or trained assembly staff can install or open the Inverter.

Before you start…

Thanks for purchasing Solar on-Grid Inverter. SOLAR ON-GRID INVERTER is a highly reliable product due to innovative design and perfect quality control.
This manual contains important information of installation, operation and safety reminding of this unit. Be sure to read this manual carefully before enjoying this product.
If you encounter any problem during installing or running this unit, please check this manual first before contacting with your local dealer or representative. Most of the problems you encountered will be solved according to the instruction inside.

Thank you for purchasing our product again. Please keep this manual in safe place for later use.

Table of Contents

IMPORTANT SAFETY INSTRUCTIONS 4
Installation and operating instructions 11
2. Installation 12
3. System diagram 19
4. Inverter status..... 19
5. Communication 23
Trouble shooting..... 25
Specification 26

IMPORTANT SAFETY INSTRUCTIONS

1. **SAVE THESE INSTRUCTIONS-**This manual contains important instructions for models **GT Series** that shall be followed during installation and maintenance of the **Solar On-Grid Inverter.**
2. Do not remove the covers. No user serviceable parts inside. Refer service to qualified service personnel.
3. Both AC and DC voltage sources are terminated inside this equipment. Each circuit must be individually disconnected before servicing.
4. When a photovoltaic array is exposed to light, it supplies a DC voltage to this equipment.
5. Risk of electric shock from energy stored in capacitors. Do not remove cover until 3 hours after disconnecting all power sources.
6. This unit is designed to feed power to grid (utility) only, do not connect this unit to AC power supplier. If connecting to those facilities, AC power supplier will be damaged.
7. Please take out the unit from packaging box carefully. Check if there is any outside damage. If you find any damage, please contact with your local dealer.

● Safety precautions/safety notes

Only the trained qualified electrical personnel are allowed to perform the electrical installation, wiring, opening, repair, and/or modification of the Solar On-Grid inverters. Even when no external voltage is present. The Solar On-Grid inverters can still contain high voltages and the risk of electrical shock.

The temperature of the heat sinks outside of the device can reach over 70 degree C in normal operation (ambient temperature rating:+45 degree C).There is the risk of burn injury when these parts are touched.

The following general safety precautions must be observed during all phases of operating, service, installation, modification, and repair of the device. Failure to comply with these precautions or with specific warnings elsewhere in this manual violates safety standards of design, manufacture, and intended use of the device. The manufacture assumes no liability for the customer’s failure to comply with these requirements.

● Précautions/notes concernant la sécurité

Seul le personnel qualifié et formé est autorisé à effectuer une installation

électrique, un câblage, à ouvrir, réparer et/ou modifier le dispositif d'inversion photovoltaïque (PV). Même si aucune tension externe n'est présente, les dispositifs d'inversion photovoltaïque sont susceptibles de contenir des pièces sous haute tension et de présenter des risques de choc électrique.

La température des dissipateurs thermiques placés à l'extérieur de l'appareil peut dépasser 70°C durant le fonctionnement normal (température normale à température ambiante : 45°C). Il existe donc un risque de brûlure en cas de contact avec ces pièces.

Les précautions générales de sécurité indiquées ci-dessous doivent être observées durant toutes les phases de fonctionnement, d'entretien, d'installation, de modification et de réparation de l'appareil. Le non suivi de ces précautions ou des avertissements spécifiques indiqués ailleurs dans ce manuel viole les normes de sécurité concernant la conception, la fabrication et l'utilisation prévue pour cet appareil. Le fabricant n'assume aucune responsabilité si l'utilisateur ne suit pas ces exigences.

● Safety symbol

To reduce the risk of injury and to ensure the continued safe operation of this product, the following safety instructions and warnings are marked in this manual.

WARNING, risk of electric shock

Presents safety information to prevent injury or death to users and /or installers.

AVERTISSEMENT,risque de choc électrique

Contient des renseignements importants concernant la sécurité visant à éviter les risques de blessures graves ou mortelles pour les utilisateurs ou les installateurs.

CAUTION (refer to accompanying documents)

Presents information to prevent damage to this product.

ATTENTION (consultez la documentation accompagnant le produit)

Attire l'attention sur des renseignements visant à éviter les risques de dommages pour le produit.

Equipment grounding conductor symbol

The earth ground symbol

Intended use

Solar On-Grid inverters shall be installed according to the safety regulation applied for installations to meet the following qualifications:

1. electrical installation must be carried out correctly to meet the applicable regulations and standards;
2. Solar On-Grid inverters be mounted in an enclosed and well ventilated environment to against rain, condensation, moisture and dust;
3. Solar On-Grid inverters shall be installed permanently;
4. Solar On-Grid inverters shall be installed according to the instructions stated in this manual;
5. Solar On-Grid inverters shall operate according to the technical specifications;

General safety precautions

1. Personnel must remove all conductive jewelry or personal equipment prior to installation or service of the device, part, connectors, and /or wiring.
2. Trained qualified personnel are required to mount, operate, correct and/or repair this device.
3. Licensed electricians are required to install permanently wired equipment.
4. Stand on an insulated surface when working on the operating device (i.e.. ensure that there is no grounding).
5. Instructions in this manual must be precisely followed and all information on cautions or warning must be adhered to.
6. Use proper lifting techniques whenever handling enclosure, equipment or parts.
7. The Solar On-Grid inverters must be provided with an equipment-grounding conductor connected to the AC grounding conductor directly.
8. The Solar On-Grid inverters must be provided with a DC grounding electrode conductor to be connected to an AC equipment-grounding conductor directly for a single point ground.
9. The grounded conductor must be ungrounded and energized when ground fault is indicated.
10. The AC neutral connection is only for voltage sensing and shall be neither used

to carry currents nor bonded to ground.

11. The list does not contain all measures pertinent to the safe operation of the device. If special problems arise which are not described in sufficient detail for the purposes of the buyer, contact your specialized dealer or technician.

● Safe installation and operation

1. Installation of the device must be in accordance with the safety regulations (e, g.UL1741\C22.2) and all other relevant national or local regulations. Correct grounding and short circuit protection must be provided to ensure operational safety.
2. Read all instruction and cautionary marks in the manual before installation of this device.
3. Switch off the circuit breakers before installation and wirings; never stand on a wet location when work on installation and wiring.
4. Check both of the AC and DC connections with a volt meter prior to any installation or removal procedures.
5. Enclose the outer covering well before switch on the circuit breakers.
6. Place the inverter in an environment with well ventilation and protection against rain, condensation, moisture and dust.
7. Even no external voltage is present; the Solar On-Grid inverters can still contain high voltages and the risk of electrical shock. Allow 3 hours for the inverter to discharge the energy completely.
8. Temperature of the heat sinks outside of the device can reach hot enough in normal operation to cause skin burn injury when these parts are touched. Pay attention on the high temperature components and sharp edges.
9. To prevent the risk of fire hazard, do not cover or obstruct the heat sink.
10. Allow changes in your electrical system to be carried out only by qualified electricians.

WARNING, risk of electric shock

AVERTISSEMENT, Risque de choc électrique

● Repair and maintenance

The Solar On-Grid Inverter contains no user serviceable parts. Only PV-trained service

staffs are authorized to carry out for repairs and maintenance of the unit. Please return the device for repair and maintenance.

- **Réparation et entretien**

Cet onduleur Solar On-Grid ne contient aucune pièce réparable par l'utilisateur. Seuls des techniciens spécialement formés à la technologie photovoltaïque (PV) sont autorisés à effectuer les réparations et l'entretien de cet appareil. Veuillez retourner l'appareil pour toute réparation ou tâche d'entretien.

Wiring the inverter

- Input/output terminals: use wire size No.10-12AWG (Nylon-insulated, cord end terminal), 90° Copper wire.
- Crimped and sealed copper should be used to connect the DC cables to the DC terminals of the INVERTER. Soldered cable lugs are also acceptable. Torque all AC wiring connections to 8-10 inch-pounds.
- Torque all DC cable connections to 8-10 inch-pounds .Be extra cautious when working with metal tools on. The potential of dropping a tool causing other electrical parts resulting in sparks could cause an explosion. Tools required for AC wiring connections: slotted screwdriver 1/8"(3 mm).
- Reconfirm that all connections have been performed properly and all screws are properly tightened.

Branchement de l'onduleur

- Terminaux d'entrée et de sortie : utilisez des fils de cuivre de calibre nº 10-12(Nylon isolés, fin cordon administration), 90 °C.
- effectuer le raccordement des câbles C.C. aux terminaux C.C. de l'ONDULEUR. Les cosses de câble soudées sont également autorisées. Veuillez consulter la section sur les diverses tailles de câbles de batterie pour plus de détails sur leur utilisation avec cet appareil. Serrez tous les branchements de câbles C.A. à un couple de 8-10 pouce-livre.
- Serrez tous les branchements de câbles C.C. à un couple de 8-10 pouce-livre. Soyez extrêmement prudent lorsque vous utilisez des outils en métal sur ou à proximité de batteries. La chute d'un outil sur la batterie ou sur tout autre composant électrique pourrait provoquer des étincelles et entraîner une explosion. Outils requis pour les raccordements C.A. :tournevis pour écrou à fente 3 mm(1/8 po).
- Assurez-vous que tous les raccordements ont été correctement effectués et que toutes les vis soient bien serrées.

WARNING!

Connection of the AC cable

Reconfirm that the circuit breaker to the main utility is switched OFF before connect the power cable from the breaker to the AC connector.

AVERTISSEMENT!

Raccordement du câble C.A.

Assurez-vous que le disjoncteur de l'appareil principal est bien désactivé avant de raccorder le câble d'alimentation du disjoncteur au connecteur C.A.

CAUTION!

Connection of the DC cable

Polarities of each DC input voltage from a PV string shall be precisely correctly connected to the "+"(positive) and "-"(negative) terminals of a pair respectively. The DC voltage must be less than 450V in any condition.

ATTENTION!

Raccordement du câble C.C.

Les polarités de chaque entrée d'alimentation C.C. d'une chaîne PV devront impérativement être correctement raccordées aux terminaux « + » (positif) et « - » (négatif) de chaque paire. La tension d'alimentation C.C. doit à tout moment rester inférieure à 450 V.

WARNING!

GFDI Fault happen

Please check the GFDI LED display and OPTI-Solar solar control error status carefully before GFDI Switch turn on.

AVERTISSEMENT!

Dysfonctionnement GFDI

Veuillez attentivement vérifier le voyant GFDI et le statut d'erreur du contrôle solaire OPTI-Solar avant d'enclencher le commutateur GFDI.

WARNING!

Route the DC connection cables to the Solar On-Grid Inverters away from any possible hazards that could damage the cables.

AVERTISSEMENT!

Veillez à installer les câbles d'alimentation C.C. vers les onduleurs Solar On-Grid à l'écart de tout obstacle qui risquerait de les endommager.

WARNING!

Hazardous voltage is still present on the device after disconnection of all PV DC inputs. Allow 3 hours for the inverter to discharge the energy completely.

AVERTISSEMENT!

Une tension dangereuse est toujours présente dans l'appareil même une fois toutes les entrées d'alimentation C.C. PV débranchées. Accordez 3 heures à l'onduleur pour qu'il se décharge entièrement de toute énergie.

WARNING!

HIGH LEAKAGE CURRENT EARTH CONNECTION ESSENTIAL BEFORE CONNECTING SUPPLY.

AVERTISSEMENT!

UNE MISE A LA TERRE POUR COURANT DE FUITE EST ESSENTIELLE AVANT DE BRANCHER L'ALIMENTATION.

Installation and operating instructions

1. Overview

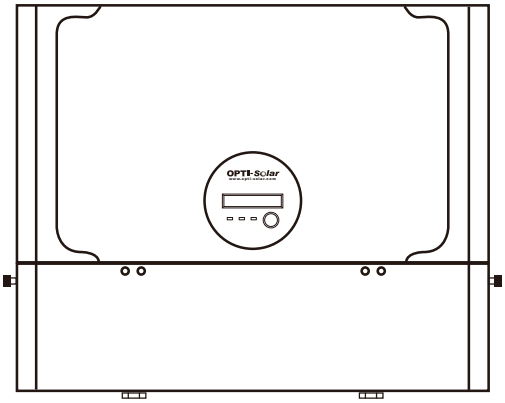

Front view

Bottom view

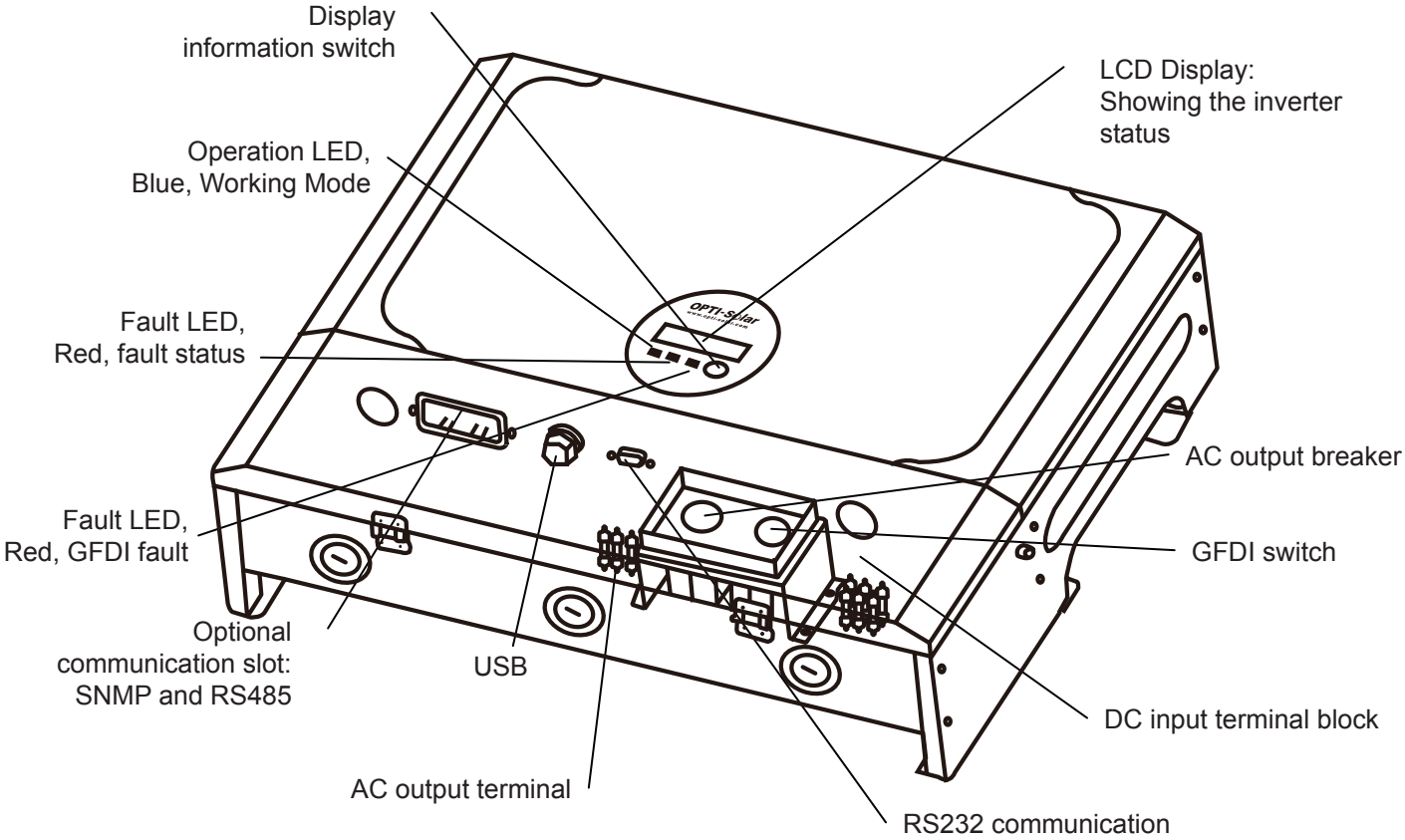

Display and connections

2. Installation

Before starting installation please check the following items:

- This unit is designed for outdoor usage. But it is suggested that the unit can't be exposed under rain or water directly and use a shelter to protect the unit would be better.
- Do not expose this unit to the sun directly. This may reduce the output power due to high temperature.
- Check the ambient temperature of installation is within specification (-25~+45°C).
- The grid to be connected is 208VAC \ 240VAC system.
- The connection to grid is approved by utility company.
- The installation must be done by qualified personnel.

Though Solar on-grid inverter can be installed where temperature up to +45°C, we still strongly recommend that it should be installed where ambient temperature in the range of 0~+40°C.

Mount Solar on-grid inverter to the wall

1. Select a wall or solid place can support the inverter.
2. Convection cooling space required. To dissipate the heat generated by inverter, 92cm space at least from the Solar on-grid inverter bottom to the end is necessary.
3. Mark the hole position according to following table or mounting template attached.

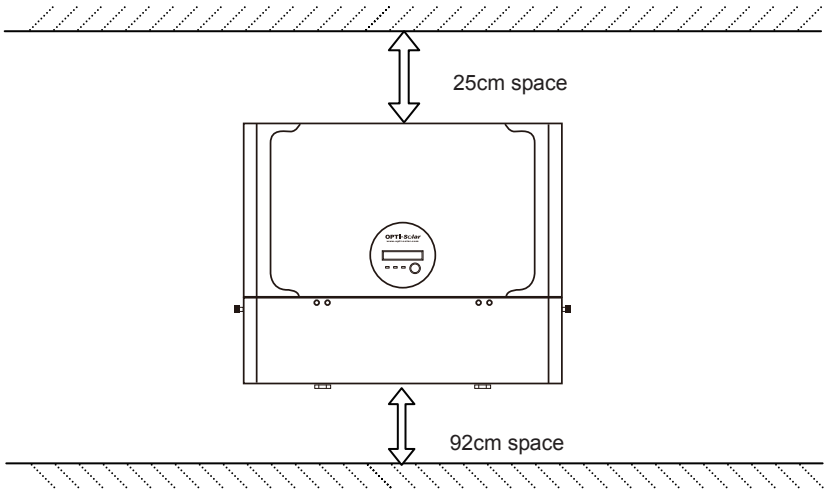

Installation murale de l'onduleur Solar On-Grid Inverter

1. Choisissez un mur ou un support solide sur lequel fixer l'onduleur.
2. Un dégagement de refroidissement par convection est nécessaire. Afin de dissiper l'énergie générée par l'onduleur, un dégagement minimum de 92 cm entre le bas de l'onduleur Solar On-Grid et la surface est requis.
3. Indiquez l'emplacement des orifices de fixation en vous aidant du tableau ci-dessous ou du modèle ci-joint.

Model	GT 1500	GT 2000	GT 3000	GT 4000
W (mm)	347.6	347.6	347.6	546
H (mm)	257	257	257	257

4. Drill the holes with screw. Percez les orifices et insérez les vis.
5. Hang the inverter on the 4 screws. Accrochez l'onduleur aux 4 vis.

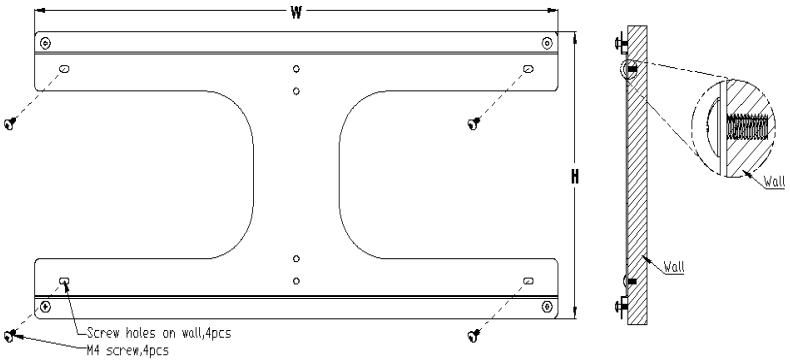

6. Drive "fix screw" on bottom leg to fix the inverter.

Be sure to check the mounting of inverter. Try to lift up the inverter on the bottom, make sure it is firmly attached.

Select the installation location carefully. The height of inverter is recommended to be observed, so that user can check the inverter status easily; the wall must be firmly

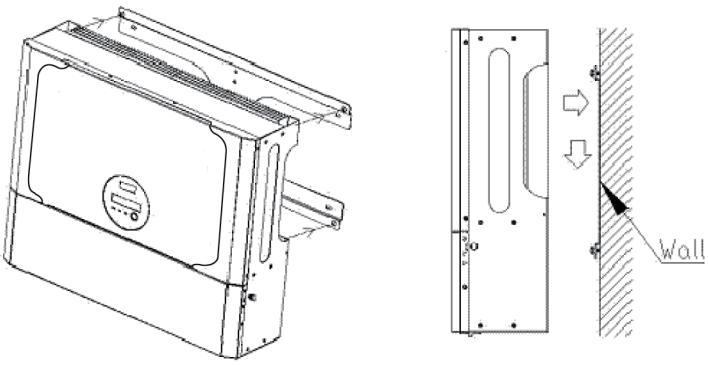

enough, this can prevent slight vibration during inverter working.

Serrez la « vis de maintien » située sur le support inférieur afin de verrouiller

l'onduleur en place.

Vérifiez la bonne installation de l'onduleur. Pour cela, essayez de soulever l'onduleur par le bas; il ne devrait pas bouger.

Sélectionnez l'emplacement de l'onduleur avec soin. Il est recommandé d'installer l'onduleur à une hauteur permettant à l'utilisateur une vérification aisée du statut de l'appareil; le support mural doit en outre être solide afin d'éviter les légères vibrations générées par le fonctionnement de l'onduleur.

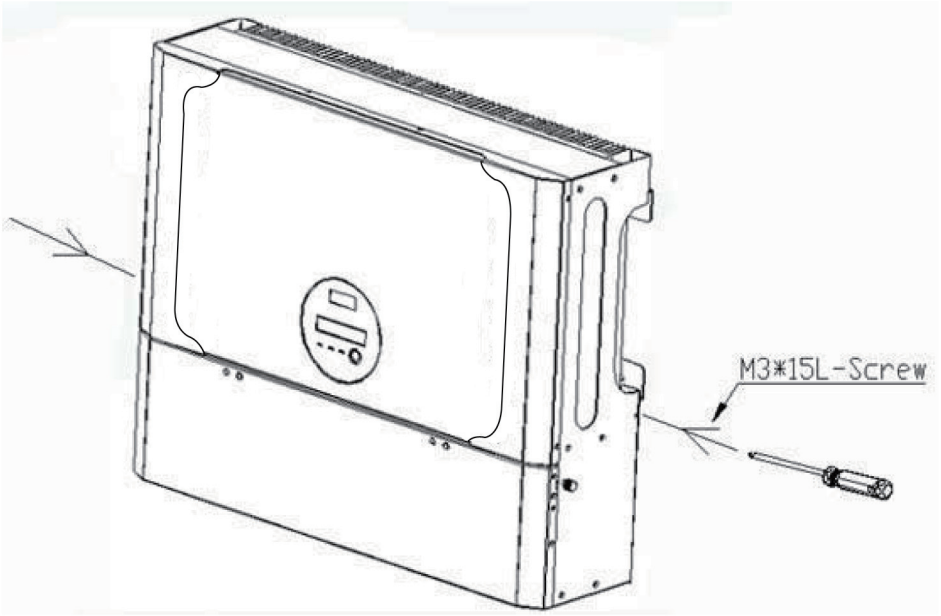

Please open the wiring compartment cover to setup the AC & DC wires, the reference following the National electric code, ANSI/NFPA 70.

⚠ **Veuillez ouvrir la porte du boîtier de raccordement afin de connecter les fils d'alimentation C.A. et C.C. en suivant la norme ANSI/NFPA 70 du Code national de l'électricité.**

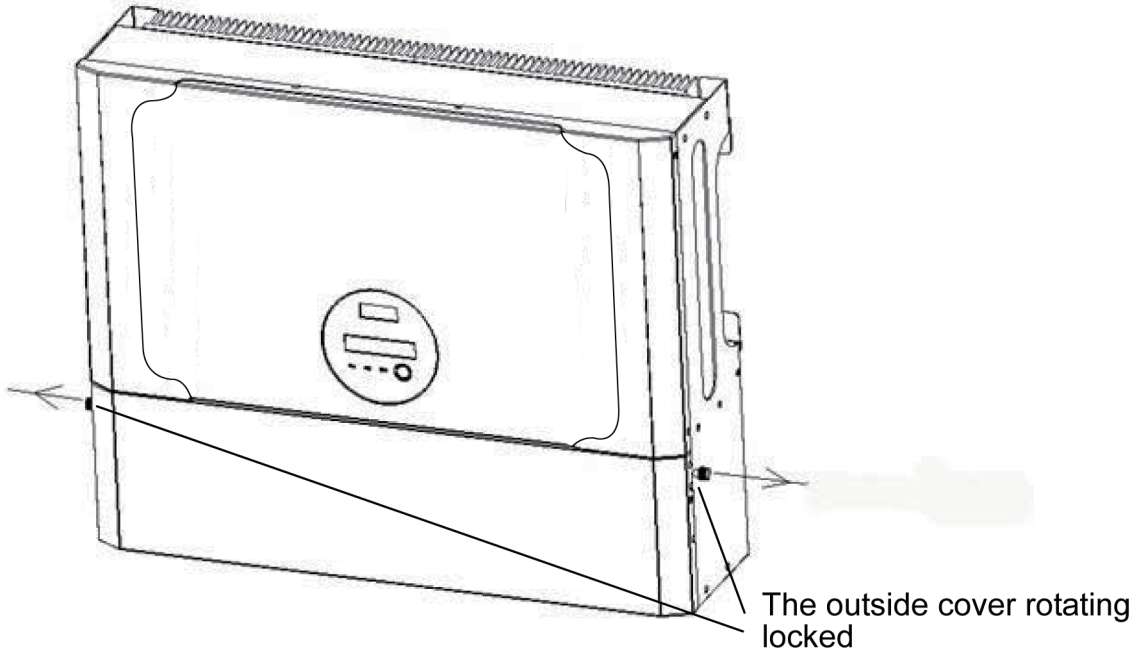

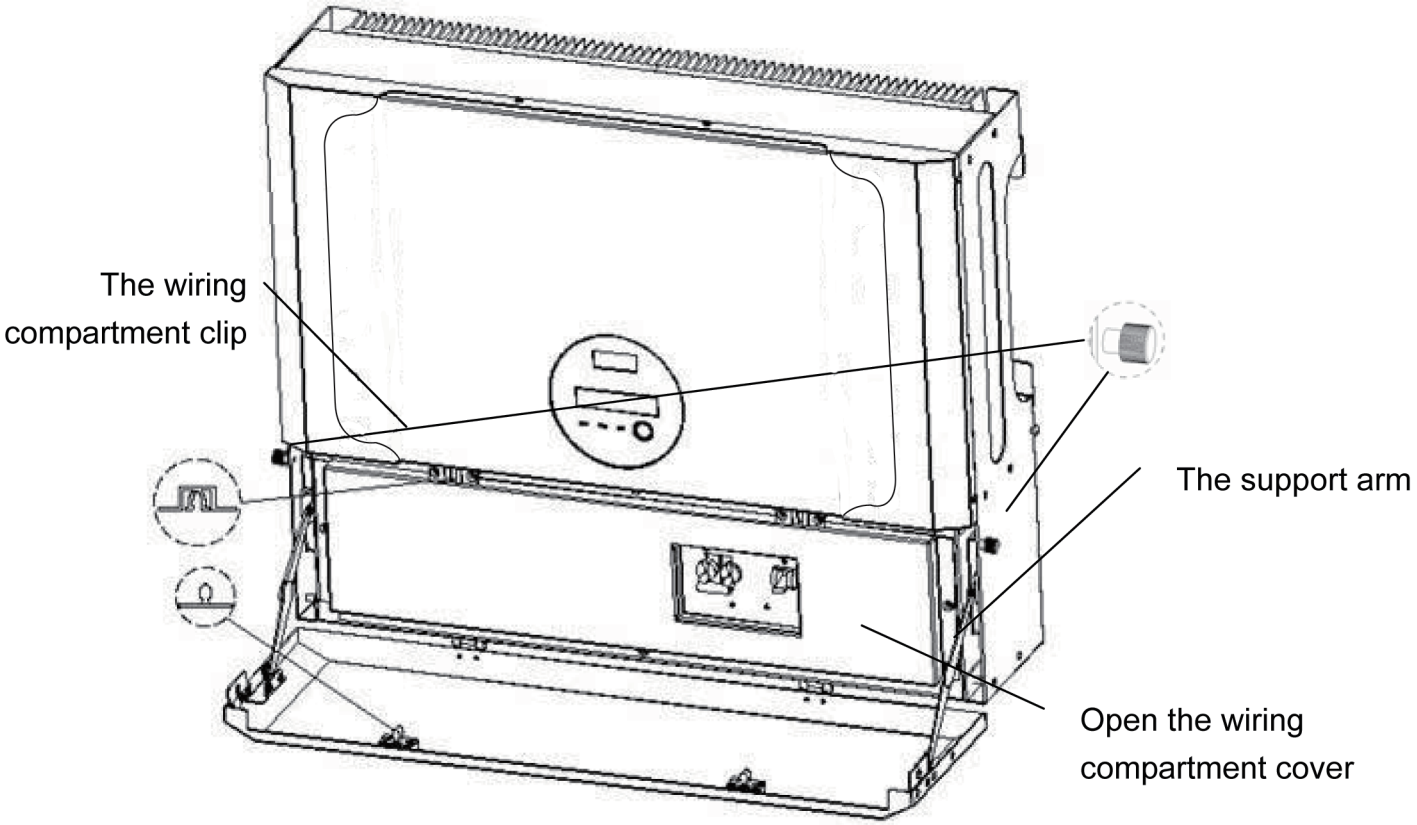

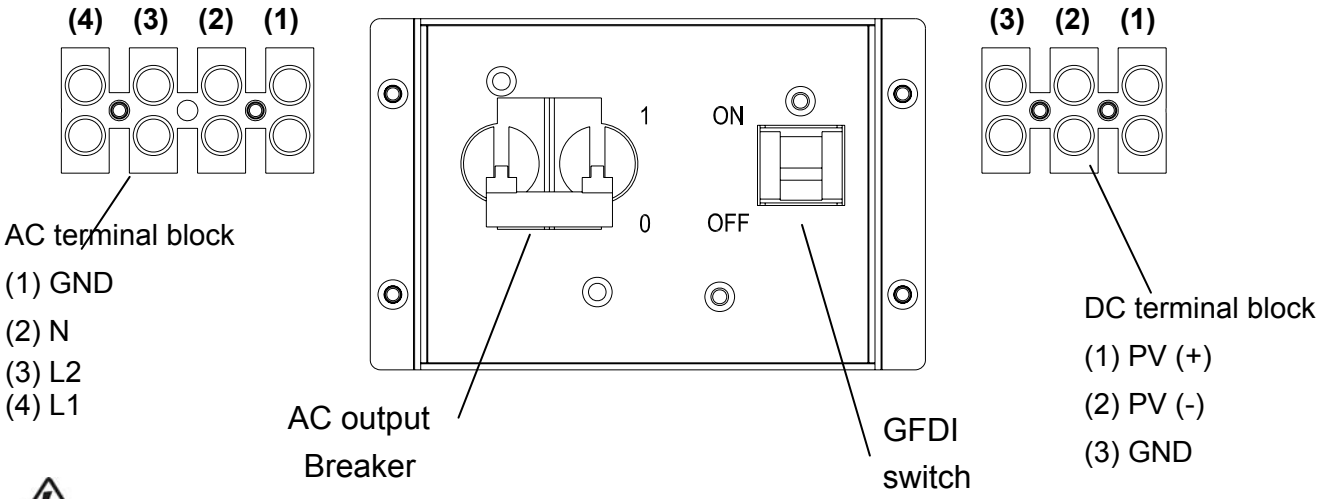

Connect to grid (AC utility)

1. Check the grid (utility) voltage and frequency, **208VAC \ 240VAC**, 60Hz, Single phase.

- **208VAC L-N-G**
- **240VAC L1-L2-N-G**

2. Turn off the AC breaker between AC wire and utility.
3. For GT 4000, connect AC wires as follows:

- Insert Line wire to **L1\L2**, Neutral wire to **N** and G wire to pin ⏚
- Screw the wires to the AC terminal block. Make sure it is perfectly matched and tighten.

4. Suggested wire size for AC cable:

Raccordement au réseau électrique (appareil C.A.)

1. Vérifiez la tension et la fréquence du réseau : 208 VCA \ 240VAC, 60 Hz, monophasé.
2. Désactivez le disjoncteur d'alimentation C.A. entre le fil C.A. et l'appareil.
3. Pour le GT 4000, effectuez les raccordements comme suit :

- Raccordez le fil de ligne sur **L1\L2**, le fil neutre sur **N** et le conducteur de terre à la tige ⏚
- Vissez les fils sur le bloc du terminal d'alimentation C.A. Vérifiez soigneusement la bonne correspondance des fils et serrez.

4. Suggestion de taille de fil pour câble C.A. :

Model	ϕ (mm)	AWG no.
GT 1500	≥1.2	≤16
GT 2000	≥1.2	≤16
GT 3000	≥1.7	≤14
GT 4000	≥2.0	≤12
Ground wire	≥2.59	≤10

Connect to PV array (DC)

1. Turn off the GFDI switch.
2. Make sure **the maximum PV open circuit voltage (V_{oc})** of each PV string is less than 450VDC UNDER ANY CONDITION. We recommend use PV array which the range of **V_{oc}** is **380VDC to 400VDC** under 25□C ambient.
3. Connect positive from array to PV(+) terminals and negative to PV(-) terminals. DC terminal on GT 4000 can withstand 20A DC current at most.
4. After installing the wiring compartment cover, then turn on the GFDI switch.

Note:

Before connecting to DC terminals, please make sure the polarity is correct. Incorrect connection will damage the unit forever!

Raccordement au réseau PV (C.C.)

1. Désactivez le commutateur GFDI.
2. Assurez-vous que **la tension maximale du circuit PV ouvert (Voc)** de chaque chaîne PV est inférieure à 450 VCC EN TOUTE CIRCONSTANCE. Nous recommandons l'utilisation d'un réseau PV avec une plage **Voc** de **380 VCC à 400 VCC** sous 25 °C ambiant.
3. Branchez le raccord positif du réseau sur le terminal PV (+) et le raccord négatif sur le terminal PV (-). Le terminal C.C. du modèle GT 4000 peut supporter une tension C.C. de 20 A au maximum.
4. Une fois les raccords effectués, replacez la porte du boîtier et réenclenchez le commutateur GFDI.

Note :

Avant tout raccordement aux terminaux C.C., pensez à vérifier les polarités. Une inversion des polarités endommagerait irrémédiablement votre appareil.

Working mode Checking

1. After setup the wiring compartment cover and turn on the GFDI switch, the message on the LCD display should be in the sequence of “INV Waiting” → “No Utility” and the RED fault LED keeps on.
2. Turn on the AC breaker in previous section; check whether the inverter starts to work.
3. If inverter works normally, the LCD will show “Working mode”. That is the power feed to grid.
4. The checking is completed.
5. After setup the connection, then close the outside cover.

Vérification du mode de fonctionnement

1. Une fois tous les raccordements effectués, le boîtier refermé et le commutateur GFDI réenclenché, l’écran ACL devrait afficher les messages suivants dans l’ordre : « INV Waiting » (onduleur en attente) → « No Utility » (aucun appareil) et le voyant ROUGE de dysfonctionnement devrait être allumé en continu.
2. Enclenchez alors le disjoncteur mentionné dans la section précédente et vérifiez la mise en route de l’onduleur.
3. Si l’onduleur fonctionne correctement, l’écran ACL affiche « Working mode » (mode de fonctionnement). L’alimentation du réseau est en cours.
4. La vérification est terminée.
5. Une fois ces vérifications effectuées, refermez la porte externe de l’appareil.

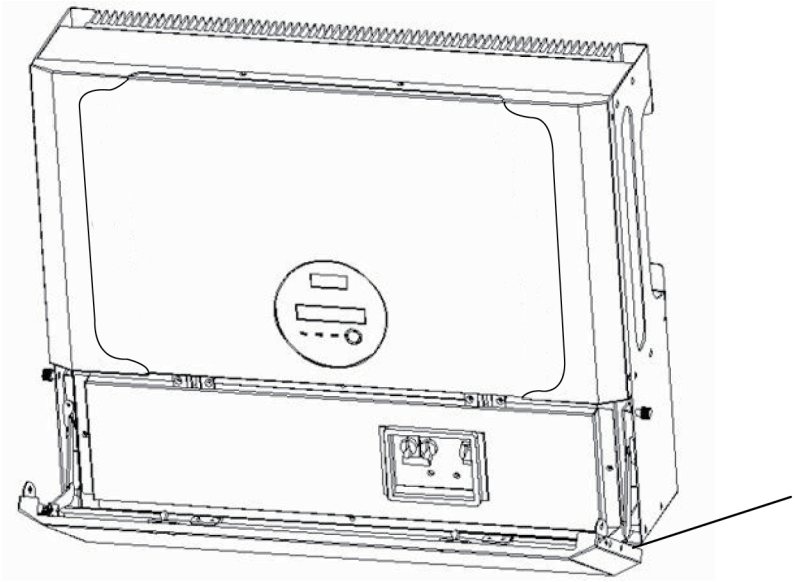

Close the outside cover

3. System diagram

1. The connection of whole PV system is indicated as figure.
2. PV array: Provide DC power to GT 4000 inverter.

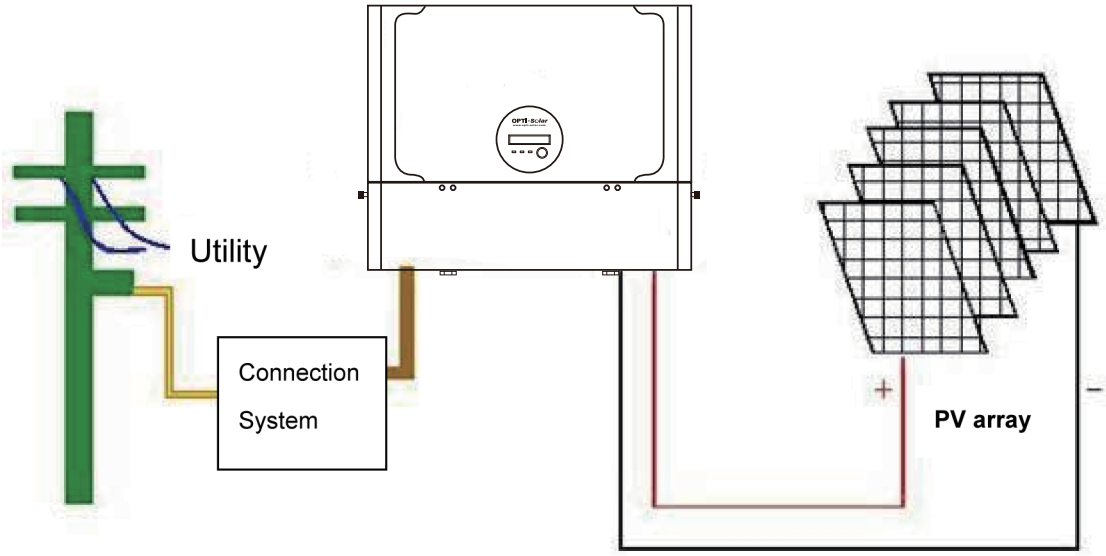

3. GT 4000 inverter: Convert DC power from PV array to AC (Alternative Current) power. Because GT 4000 is a grid-connected inverter, it works to control its current amplitude according to power provided from PV array. GT 4000 always try to get maximum power from PV array.
4. Connection system: The “interface” between Utility and inverter. It may consist of electrical breaker, fuse and terminals for connection. To make sure safety, this part must be designed by qualified technician.
5. Utility: It is also call “grid” in this manual. The way your power company provides power to your place. Please note that, GT 4000 can connect to low-voltage system (namely, 208VAC\ 240VAC) system only.

4. Inverter status

Solar on-grid inverter is designed to be friendly; therefore, the status of inverter can be easily understood by panel display. All the possible information is shown in the following table.

Display information

LED

There are 3 LED's on Solar on-grid inverter, one is blue and the others are red.

1. Power on (Blue LED): It lights when Solar on-grid inverter is working. It will be dark when fault mode or shutdown mode.
2. Fault (red LED): Once the LED light, it means inverter meets "fault" or "failure" conditions. The detail conditions can be found in the table below.
3. GFDI Fault (red LED): the LED light, it means inverter meets "GFDI fault" conditions. The detail conditions can be found in the table below.

- **LCD**

(A) In generally, LCD will show "Working Mode" as Solar on-grid inverter is working.

(B) When LCD shows "Working Mode", press button over 3 sec., LCD will show "Setting" then enter setting function mode:

LCD Contrast setting > press button over 3 sec. to enter
Press button to select: Contrast 1 to Contrast 5
Then press button over 3 sec.
LCD will show "Setting", Contrast setting is OK.

LCD Language setting > Press button over 3 sec. to enter
Press button to select: English or German.
Then press button over 3 sec.
LCD will show "Setting", Language setting is OK.

If user doesn't press over 5 sec.,
LCD will escape setting function mode.

(C) In "Working Mode", you can toggle button to enter meter value mode,
LCD will show general meter value by turns:

O/P WATT =
PV VOLT =
PV CUR =
GRID VOLT=
GRID FREQ =
O/P CUR =
xxx KWH (O/P energy)

RATING= xx KW (PV Inverter Rating)
M CPU Ver xxx (Firmware version of Mater CPU)
S CPU Ver xxx (Firmware version of Slave CPU)

1). If user doesn't press button over 5 sec., LCD will escape meter value mode then LCD shows "Working Mode".
2). During meter value mode, if user press button over 5 sec., the current screen will "Freeze" (Lock).
3). If screen is freezing (Lock), user press button over 5 sec., the current screen will "Unfreeze" (Unlock).

(D) Error Message:

No Utility	No AC Line
PV Over Voltage	PV Voltage is too high
DC Bus High	DC bus voltage is too high
DC Bus Low	DC bus voltage is too low
Over Temperature	Temperature is too high
Grid Fault	Grid Voltage or Grid Frequency is wrong
Device Fault	Hole sensor, GFCI Device or AD Reference Voltage Fault
Isolation Fault	PV Panel isolation problem
Impedance Fault	Grid Impedance Fault
Ground I Fault	Output ground leakage current too high
Relay Failure	Output Relay Fail
DC INJ High	Output DC injection too high
Ref 2.5V Fault	2.5V reference voltage inside problem
DC Sensor Fault	Output DC sensor abnormal
GFDI Fault	GFDI detection problem
Sci Fault	Communication between Master and Slave problem
Consistent Fault	The value of Master and Slave are mismatch
CPU Ver Mismatch	Firmware Version of Master and Slave are not the same
EEPROM Fault	EEprom problem
Grid V Mismatch	The Grid V of Master and Slave are mismatch
Grid F Mismatch	The Grid F of Master and Slave are mismatch
Grid Z Mismatch	The Grid Impedance of Master and Slave are mismatch

GFDI Mismatch	The GFDI value of Master and Slave are mismatch
DC Curr Mismatch	The Output DC current of Master and Slave are mismatch

Message table in English

Operating conditions	Display message	Description
Normal working status		
Power off	No display	PV inverter is totally shutdown, IPV <=90V.
Standby	INV Standby	90V< Input voltage < =100V.
Initialization & waiting	INV Waiting	Input voltage range 100~150V during start-up. After PV voltage is higher than 100V, inverter is waiting for feeding to grid.
Check grid	Testing	When PV voltage> 150V, inverter is checking feeding conditions.
Feeding grid, MPPT	Working Mode	Inverter is feeding power.
Updating Master CPU firmware	Master Flash	The internal program is updating Master CPU through RS232 interface.
Updating Slave CPU firmware	Slave Flash	The internal program is updating Slave CPU through RS232 interface.
Monitoring parameters		
Instantaneous Output power	O/P Watt=xxxxW	The real time output power in xxxx W.
Accumulated energy information	xxxxx KWh	Total energy which has been feed to grid since inverter was installed.
Grid voltage	GRID VOLT=xxx.xV	Grid voltage in xxx.x VAC.
Grid frequency	GRID FREQ=xx.xHz	Grid frequency in xx.x Hz.
AC feeding current	O/P CUR=xx.xA	AC grid current amount in xx.x A.
PV panel voltage	PV VOLT=xxx.xV	Input voltage from PV panel, xxx.x VDC.
System fault		
Isolation failure	Isolation Fault	Earth fault of the PV-panels or failure of surge voltage protection.
GFDI (Ground Fault Current Interrupter) active	Ground I Fault	Current on ground conductor is too high.

Grid failure	Grid Fault	Grid measured data is beyond the specification (voltage & frequency).
Abnormal Grid Impedance	Impedance Fault	1. Grid impedance higher than the permissible value. 2. Grid impedance change is higher than limit.
No grid utility voltage	No Utility	1. Inverter is not connected to grid 2. Grid is absent.
DC-Input voltage too high	PV Over Voltage	DC-Input voltage higher than the permissible 450V.
Inverter failure		
Consistent failure	Consistent Fault	The readings of 2 microprocessors are not consistent. It is probably caused of CPU and/or other circuit do not function well.
Bus failure	DC Bus High DC Bus Low	DC-Bus voltage too high or too low.
Device failure	Device Fault	The device is unable to return to normal status.
Temperature too high	Over Temperature	The internal temperature is higher than specified normal value.

5. Communication

Solar on-grid inverter is equipped with power communication interface and options. User canuse “Solar Control” software to monitor the status of inverter with PC. Also, qualified personnel can upgrade the f/w inside through RS232 port.

1. RS232: To use RS232 port, you have to remove the RS232 cover on bottom side of Solar on-grid inverter. It is a DB9 socket, the pin definition is :

Pin	Assignment Description
1	N.C.
2	TxD
3	RxD
4	N.C.
5	Common
6	N.C.
7	N.C.
8	N.C.
9	N.C.

N.C. means “No Connection”

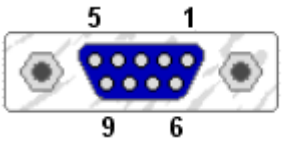

Female Side

2. Optional communication slot: This slot is a very powerful extension slot now and future. Solar on-grid inverter can accept card special design for the slot only. There are 2 kinds of cards can be applied now. One is RS485 card and the other is SNMP (Simple Network Management Protocol) card. In the future, extension card such as data logger or others may be developed. For card detail information, please refer to use manual of individual card.
3. F/W upgrade: To keep the firmware newest, one can use RS232 port and special program to upgrade inside F/W. To do this, please contact with your local representative.

We do not suggest end-user to upgrade the f/w himself. There is risk to do that without proper operations!

Trouble shooting

In this section, the trouble-shooting techniques are stated. This can help the technician to understand the problem and decide a proper action.

Tools to be prepared:

1. Digital Multi-Meter: For checking DCV, ACV, ACF (AC frequency) and open-short circuit.
2. Screwdriver: For removing unit form bracket and disconnect wiring
3. This manual.
4. Laptop computer with the installation of OPTI-Solar solar control and Firmware upgrade program.
5. Standard RS232 cable.
6. Oscillate Scope (Not necessary).

Fault condition message in English

Fault	Display	Possible actions
System fault	Isolation Fault	1. Check the impedance between PV(+) & PV(-) and earth ground. The impedance must be larger than 8MΩ. 2. If above action is useless, the isolation detection circuit fails, replace one unit.
	Ground I Fault	1. This is caused by too high ground current. 2. Unplug PV generator from the input, check AC peripheral system. 3. After the cause is cleared, plug PV input again. Check the status of the inverter. 4. If above actions are useless, the GFDI circuit fails, replace one unit.
	Grid Fault	1. Wait for 300 seconds, if the grid come back to normal, inverter will start again automatically. 2. Make sure grid voltage and frequency meet the specifications. 3. Use OPTI-Solar solar control to adjust operation range. 4. If above actions are useless, replace one unit.
	No Utility	1. Grid is not connected; check the AC connection by multi-meter. 2. Check grid connection, such as wire and connector to the inverter. 3. Check AC breaker between inverter and grid; if it is tripped, DO NOT CLOSE again, replace another unit.

Fault	Display	Possible actions
Inverter failure	PV Over Voltage	1. Check the PV open voltage; see if it is more than or too close to 450VDC. 2. If PV voltage is much less than 450VDC (e.g. <430V), measure the DCV by multi-meter, compare the readings on meter and LCD, if >5%, replace another unit.

	Consistent Fault	1. It is caused by the reading between main and redundant controllers are different. 2. Disconnect PV (+) or PV (-) from the input, start the unit again. 3. If this does not work, replace another one.
	Device Fault	1. Caused by improper operation of the circuit. 2. Disconnect PV (+) or PV (-) from the input, start the unit again. 3. If it does not work, replace another one.
	Over Temperature	1. The internal temperature is higher than specified normal value. 2. Reduce the ambient temperature by some other ways or move inverter to cooler place. 3. If it is not effective, the temperature sensors fails, replace another one.

Electrical Specification

● **Input data**				
Model	GT 1500	GT 2000	GT 3000	GT 4000
Maximum Input power	1875W	2500W	3750W	5000W
Nominal Input power	1575W	2160W	3159W	4230W
Max. input voltage	450VDC			
Nominal DC voltage	360~400V			
MPPT voltage range	150V to 450V ±5%			
System start-up voltage	100V ±5%			
Working voltage range	100±5% ~ 450-5%+0%V			
Initial feeding voltage	150V±5%			
Full rating working range	250V to 450V			
Shutdown voltage	80V typical			
Maximum Input current	7.5ADC	10ADC	15ADC	20ADC
DC voltage ripple	< 10%			
DC insulation resistance	>8M ohm			
GFDI Switch	ON/OFF 20A			
DC terminal	Terminal block			

● **Output data**				
Maximum continuous output power (25 ºC)	~1650W	~2200W	~3300W	~4400W
Nominal output power	1500W	2000W	3000W	4000W
Operational voltage range[1]	**183V~228V@208Vac** **211V~264V@240Vac**			
Operational normal voltage	208Vac/240Vac			
Operational frequency range	59.3~60.5 for 60Hz[2] 59.5~60.5 for 60Hz[3]			
Nominal output frequency	60Hz			
Maximum input short circuit current	<30A			
Maximum input source back feed current to input source	0A			
Maximum output over current protection	<14.0A	<18.8A	<28.1A	<37.5A
Synchronization in rush current *208Vac\ **240Vac**	<10.6A*	<14.1A*	<21.2A*	<28.3A*
	<9.3A	**<12.2A**	**<18.4A**	**<24.6A**
Nominal output current *208Vac \ **240Vac**	7.2A*	9.6A*	14.4A*	19.2A*
	6.3A	**8.3A**	**12.5A**	**16.7A**
O/P current distortion[4]	THD<5%, each harmonics<3%			
Power Factor	>0.99			
accuracy	<2%			
Utility interconnection voltage and frequency Trip limit and trip time	<0.16 sec			
DC current injection	<0.5% of rated inverter output current			

[1] UL-1741, it is –12%/ +10%
[2] Based on limit of IEEE1547
[3] Based on limit of CSA Std. C22.2 No. 107.1-01
[4] Under utility voltage THD<3%,reference IEEE1547,EN61000-3-2
[5] under input voltage>= 400V, full rated output power, 25ºC ambient
[6] According to UL-1741 requirement

- **General data**

Model	GT 1500	GT 2000	GT 3000	GT 4000
Internal power consumption	<7W			
Standby power (at night)	<0.1W			
Minimum conversion efficiency (DC/AC)	>90% Under input voltage>210V, load >20%			
Maximum Conversion Efficiency (DC/AC)[5]	>95.0%	>95.5%	>96.0%	
CEC Efficiency	**>94.5%**	**>95.0%**	**>95.5%**	
GFDI threshold[6]	See ground fault current detection			
Maximum output fault current and duration (see 47.3.3)	<100A Duration time <80 m sec			
Ground current detection frequency	0~700Hz			
Enclose rating	NEMA 3R(rain proof)			
Operation temperature	-25 ~ +45ºC		-25 ~ +45ºC -25 ~ +40ºC full rating output About +40ºC output de-rating	
Storage temperature range	-25 ~ +70ºC			
Humidity	0 to 95%, non-condensing			
Heat Dissipation	Convection			
Acoustic noise level	<40dB, A-weighted, frequency up to 20kHz			
Altitude	Up to 3000m without power de-rating, 5ºC de-rated for each additional 500m			

Once input V is less than 250V, the relation of I/P V and load % is

$$Load\% = 0.4 \times V_i$$

Mechanical Requirements

Dimension & color

The color can be changed by customer request.

Dimension & Weight

Model	1.5 kW	2 kW	3 kW	4 kW
Physical: WxDxH (mm)	352x450x133	352x450x133	352x450x143	550x450x143
Physical: Weight (kg)	15	15	16	22
Shipping: WxDxH (mm)	470*580*290	470*580*290	470*580*290	670*580*290
Shipping: Weight (kg)	17	17	18	24

The dimension and weight here could be changed due to product modification.

Mounting method:

It is a wall-mounting unit. A mounting frame or mounting holes on the unit is necessary. To mount the unit on the wall, there is no need to disassembly the unit itself.

Transportation

Packing material must be capable of withstanding multiple shipments without internal damage. The test standard follows ISTA procedure 2A.

Reliability and maintenance

MTBF: Basically, the lifetime must be larger than 10 years.

MTBS: No servicing at all during operation. The time is same as MTBF.

MTTR: Mean Time to Repair, 30 minutes

Communication capability

Communication interface

A female 9-pin RS232 communication port is on the unit. In addition, a extension slot that can accommodate RS485 and USB is on the unit.

RS485: An option module can be added to inverter providing RS485 communication capability Extension slot

This extension slot is used to accept optional card or module for communication and other future functions. The pin assignment is same as OPTI-Solar Standard.

The Customer can download the information of “Vdc ,Adc,Vac,Aac,kWac,kWHac and output frequency “ of each inverter for series of multi string inverters. The protocol will be provided together with the inverter for use of the customer system integration.

∗The product’s specifications are subject to change without notice.

Please visit OPTI-Solar website www.opti-solar.com to download communication software if necessary.